Memory

Digital System Fundamentals

Sorayut Glomglome

Learning Outcome

- Define the basic memory characteristics.
- Explain the difference between static RAMs (SRAMs) and dynamic RAMs (DRAMs).
- Describe the various types of PROMs.
- Describe the expansion of ROMs and RAMs to increase word length and word capacity.

MEMORY

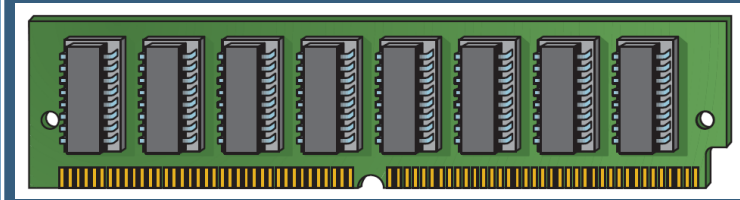

1. Memory Basics

2. The Random-Access Memory (RAM)

3. The Read-Only Memory (ROM)

4. Memory Expansion

1. Memory Basics

Semiconductor Memory Basics

- Memory is the portion of a computer or other system that stores binary data.
- In a computer, memory is accessed millions of times per second, so the requirement for speed and accuracy is paramount.
- Very fast semiconductor memory is available today in modules with several GB (a gigabyte is one billion bytes) of capacity.
- These large-memory modules use exactly the same operating principles as smaller units.
- So we will use smaller ones for illustration in this chapter to simplify the concepts.

Units of Binary Data

- Bit : smallest unit
- Nibble : 4 bits
- Byte : 8 bits, 2 nibbles
- Word : 1/2/4/8 bytes

The Basic Memory Array

- Each storage element in a memory can retain either a 1 or a 0 and is called a **cell**.
- Memories are made up of arrays of cells.

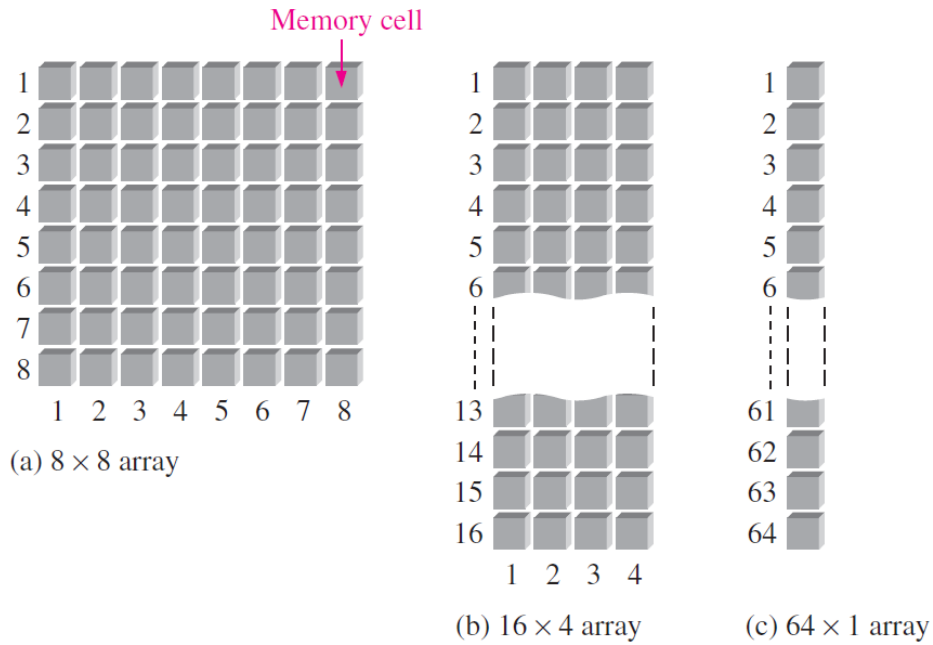

FIGURE 11–1 A 64-cell memory array organized in three different ways.

Memory Address and Capacity

- A representation of a small 8 x 8 memory chip is shown in Figure 11–2(a).

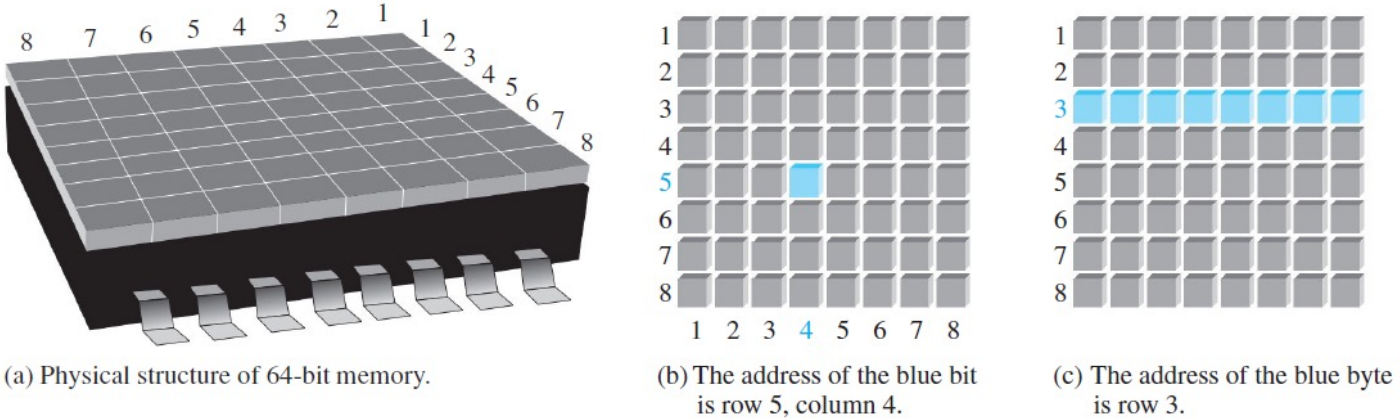

(a) Physical structure of 64-bit memory.

(b) The address of the blue bit is row 5, column 4.

(c) The address of the blue byte is row 3.

FIGURE 11–2 Examples of memory address in a 2-dimensional memory array.

Memory Address and Capacity

- The location of a unit of data in a memory array is called its address.
- In Fig 11-2 part (b), the address of a bit in the 2-dimensional array is specified by the row and column.
- In Fig 11-2 part (c), the address of a byte is specified only by the row.
- The address depends on how the memory is organized into units of data.
- Personal computers have random access memories organized in bytes.
- This means that the smallest group of bits that can be addressed is eight.
- The capacity of a memory is the total number of data units that can be stored.

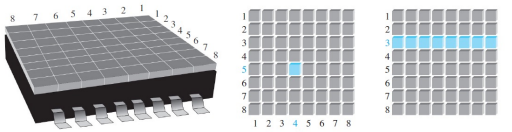

(a) Physical structure of 64-bit memory. (b) The address of the blue bit is row 5, column 4. (c) The address of the blue byte is row 3.

FIGURE 11-2 Examples of memory address in a 2-dimensional memory array.

Memory Expansion

- Figure 11–3(a) illustrates the expansion of the 8 x 8 (64-bit) array to a 64-byte memory.
- The address of a byte in the array is specified by the row and column
- The smallest group of bits that can be accessed is eight.
- This can be viewed as a 3-dimensional array.

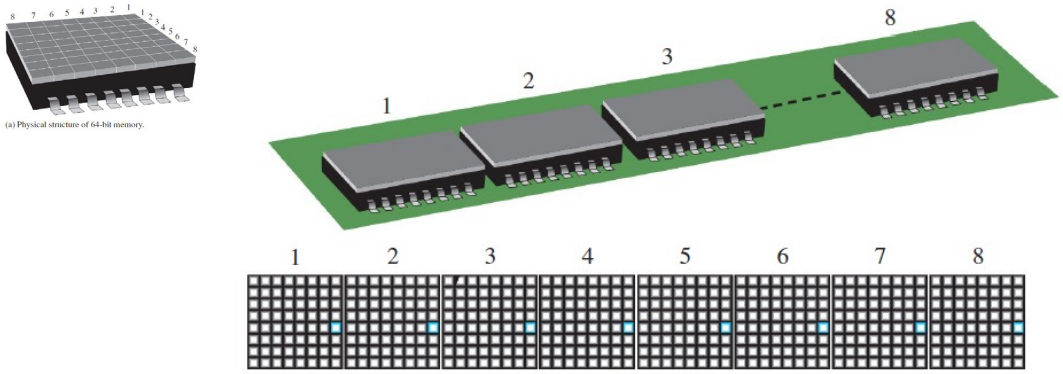

(a) The 8 × 8 bit array expanded to a 64 × 8 bit array. This array forms a memory module.

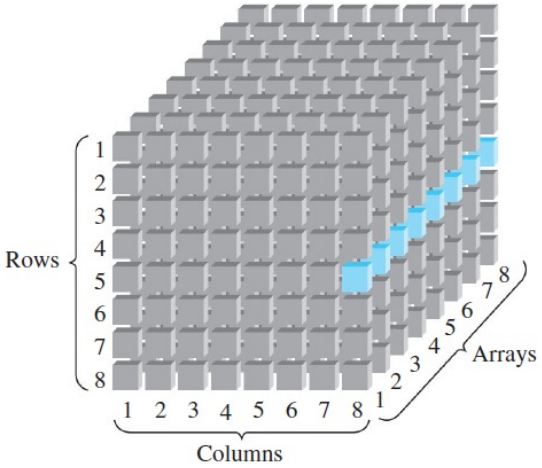

(b) The address of the blue byte is row 5, column 8.

FIGURE 11–3 Example of memory address in an expanded (multiple) array.

Basic Memory Operations

- The **write** operation puts data into a specified address in the memory.
- The **read** operation copies data out of a specified address in the memory.
- **Addressing** is the process of accessing a specified location in memory.
- The **addressing** operation selects the specified memory address for write & read operation.

Block Diagram of Memory Array

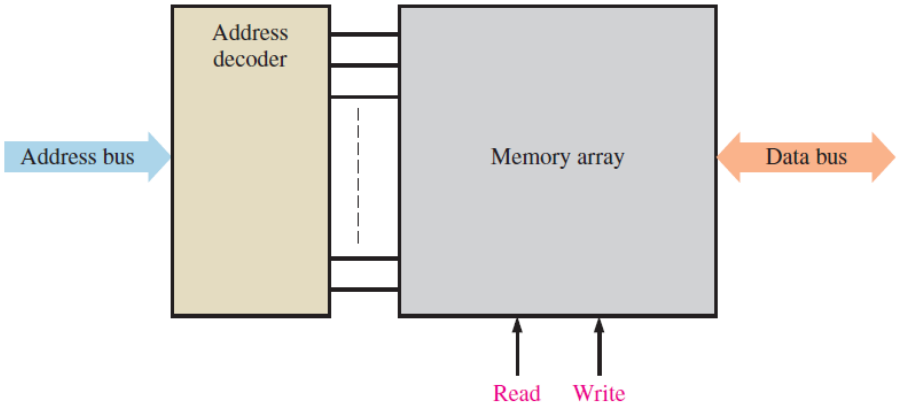

(a) Single-array memory

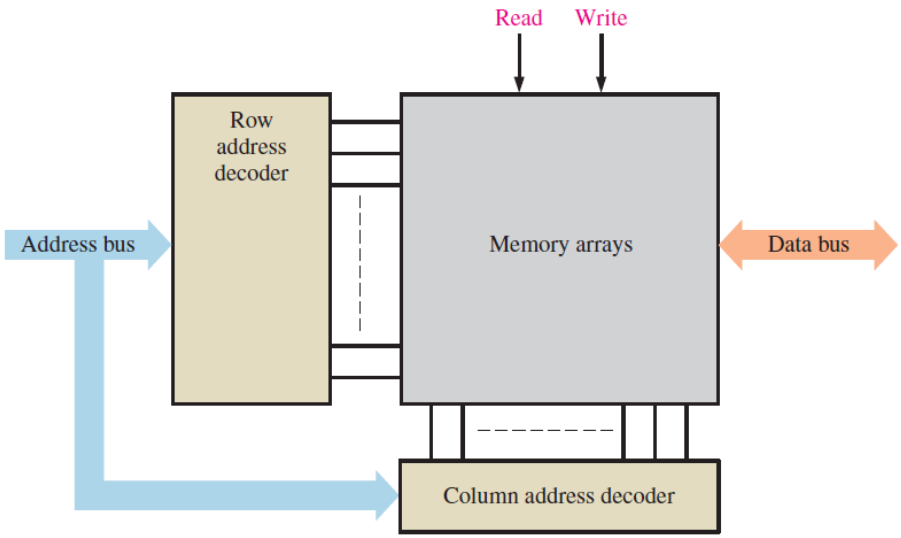

(b) Multiple-array memory

Data Bus

- Data go into the memory during a write operation and come out of the memory during a read operation on a set of lines called the data bus.
- The data bus is bidirectional.
- In this case of byte-organized memories, the data bus has at least eight lines so that all eight bits in a selected address are transferred in parallel.

Address Bus

- For a write or a read operation, an address is selected by placing a binary code representing the desired address on a set of lines called the address bus.
- The number of lines in the address bus depends on the capacity of the memory.
- For example
  - A 15-bit address code can select 32,768 locations (2^{15}) in the memory.
  - A 16-bit address code can select 65,536 locations (2^{16}) in the memory.
  - In PC a 32-bit address bus can select 4,294,967,296 or 4G locations (2^{32}).

The Write Operation

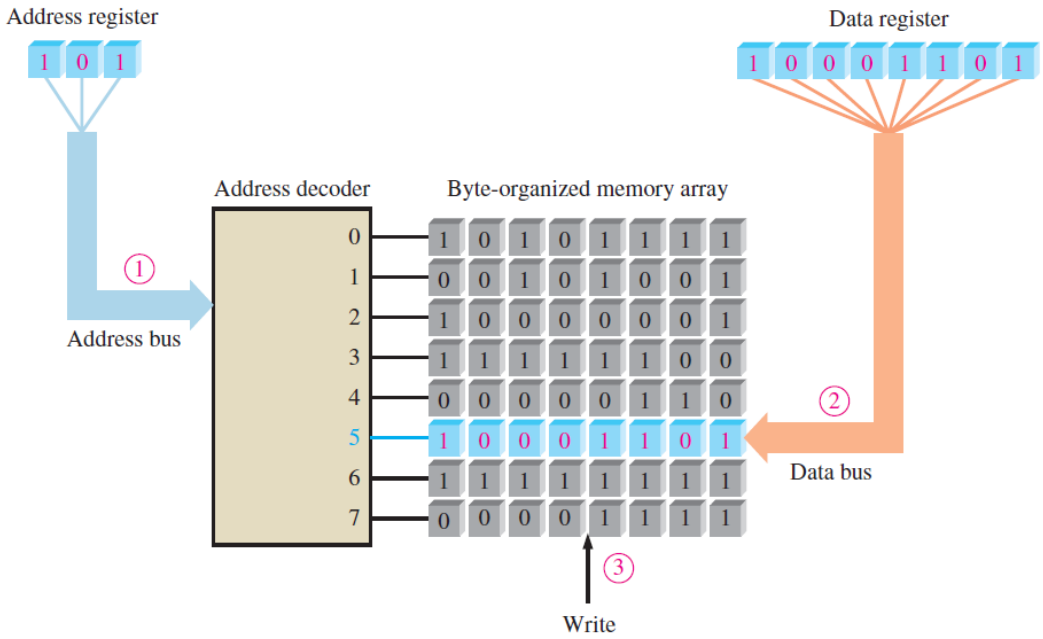

① Address code 101 is placed on the address bus and address 5 is selected.

② Data byte is placed on the data bus.

③ Write command causes the data byte to be stored in address 5, replacing previous data.

The Read Operation

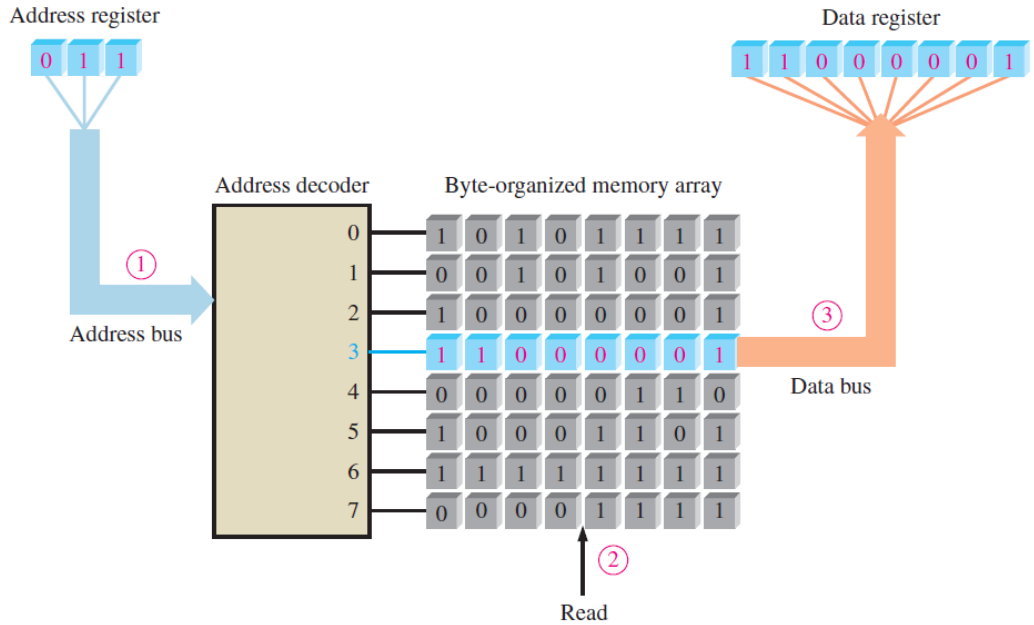

1. Address code 011 is placed on the address bus and address 3 is selected.
2. Read command is applied.
3. The contents of address 3 is placed on the data bus and shifted into data register. The contents of address 3 is not erased by the read operation.

RAMs and ROMs

- The two major categories of semiconductor memories are the RAM and the ROM.
- RAM (random-access memory) is a type of memory in which all addresses are accessible in an equal amount of time and can be selected in any order for a read or write operation.
- All RAMs have both read and write capability.
- Because RAMs lose stored data when the power is turned off, they are volatile memories.

Curious Kids: how does music get onto a cassette tape? (theconversation.com)

RAMs and ROMs

- ROM (read-only memory) is a type of memory in which data are stored *permanently* or *semipermanently*.
- Data can be read from a ROM, but there is *no write operation* as in the RAM.
- The ROM, like the RAM, is a random-access memory but the term RAM traditionally means a random-access read/write memory.
- Because ROMs retain stored data even if power is turned off, they are **nonvolatile** memories.

2. The Random-Access Memory (RAM)

Two Major Categories of RAM

- The two major categories of RAM are
  - the static RAM (SRAM)
  - the dynamic RAM (DRAM).
- SRAMs generally use latches as storage elements and can therefore store data indefinitely as long as dc power is applied.
- DRAMs use capacitors as storage elements and cannot retain data very long without the capacitors being recharged by a process called refreshing.
- Both SRAMs and DRAMs will lose stored data when dc power is removed and, therefore, are classified as volatile memories.
- Data can be read much faster from SRAMs than from DRAMs.
- DRAMs can store much more data than SRAMs for a given physical size and cost.

The RAM Family

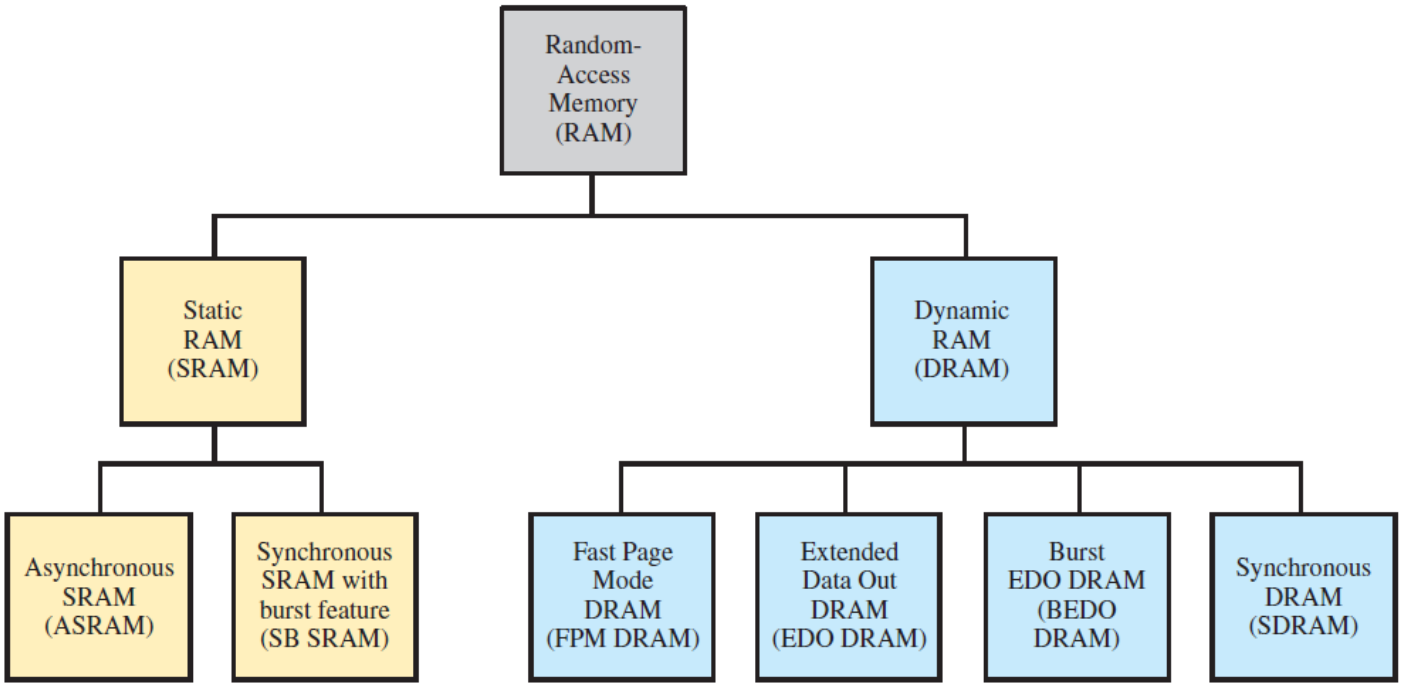

Memory Cell

- All SRAMs are characterized by latch memory cells.
- As long as dc power is applied to a static memory cell, it can retain a 1 or 0 state indefinitely.
- If power is removed, the stored data bit is lost.
- The cell is selected by an active level on the Select line and a data bit (1 or 0) is written into the cell by placing it on the Data in line.
- A data bit is read by taking it off the Data out line.

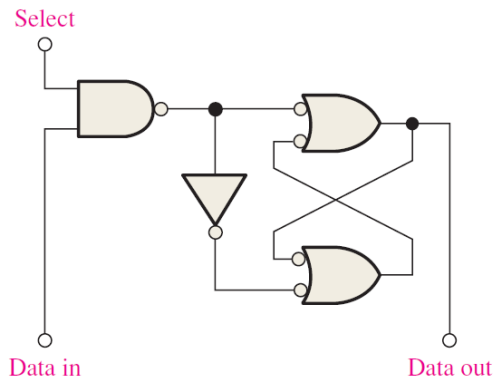

A typical SRAM latch memory cell.

Basic Asynchronous SRAM Organization

- Not synchronized with a system clock.
- A 32k x 8 bit memory

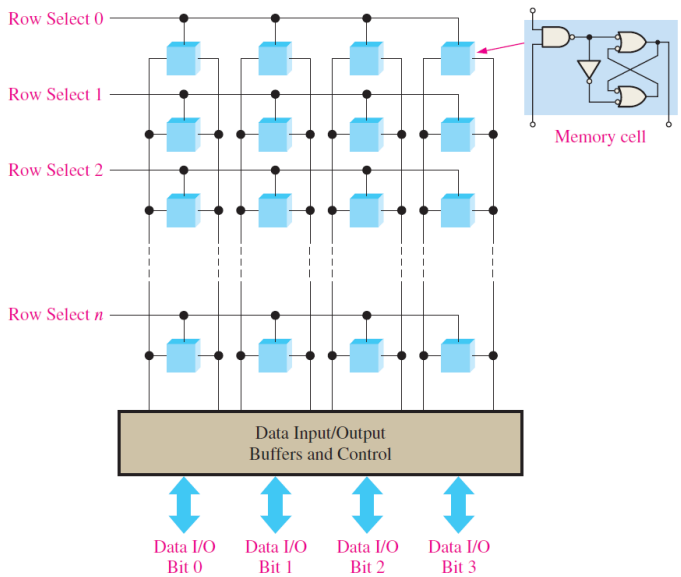

FIGURE 11–10 Basic SRAM array.

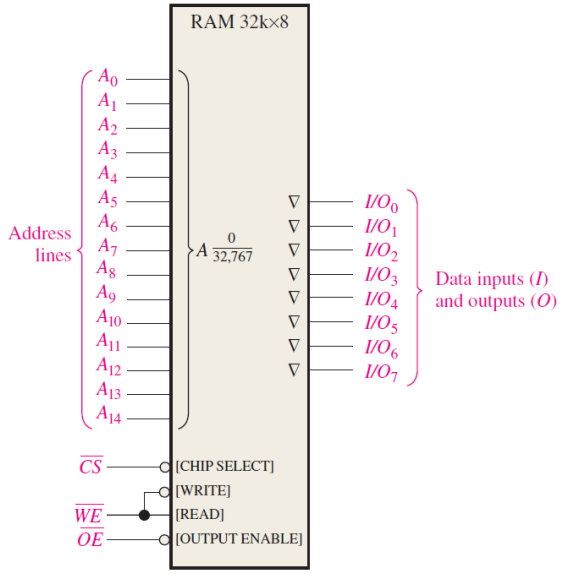

FIGURE 11–11 Logic diagram for an asynchronous 32k × 8 SRAM.

Tri-state Outputs and Buses

- Tri-state buffers in a memory allow the data lines to act as either input or output lines and connect the memory to the data bus in a computer.
- These buffers have three output states:
  - HIGH (1), LOW (0), and HIGH-Z (open).
- Logic symbols by a small inverted triangle (∇)

Read and Write Cycles

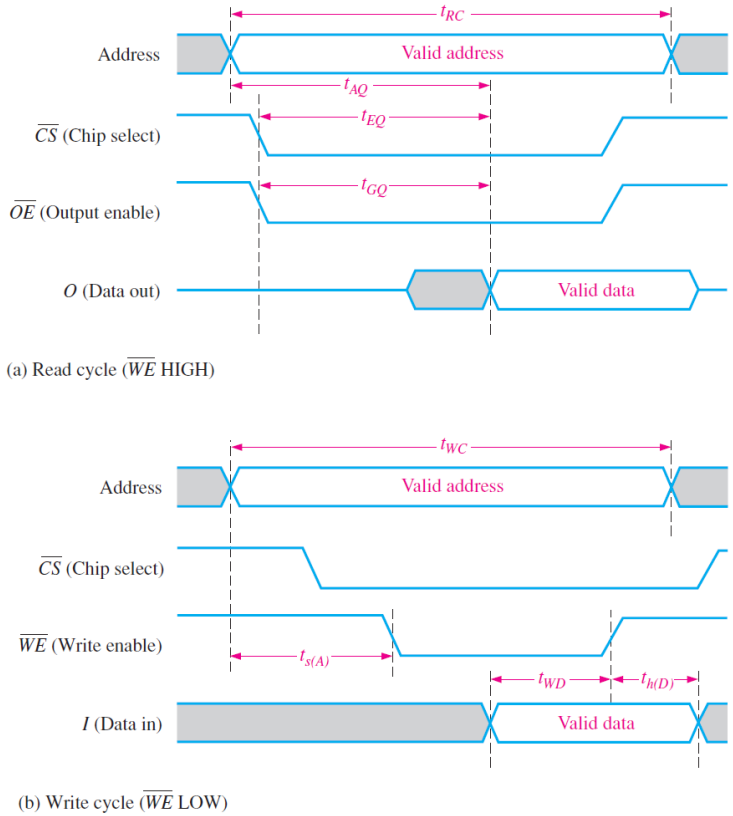

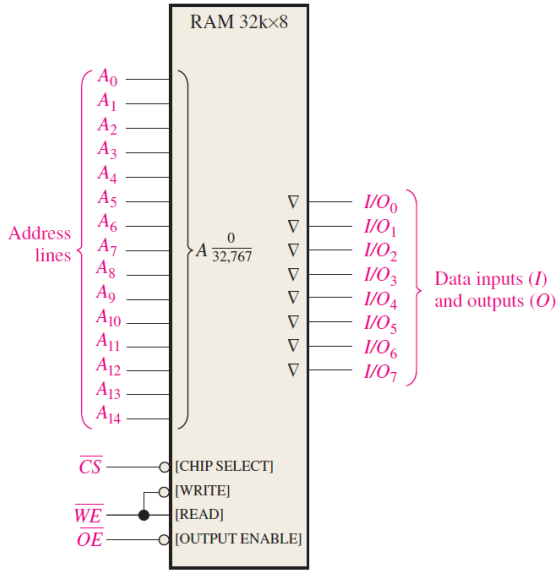

FIGURE 11–11 Logic diagram for an asynchronous 32k × 8 SRAM.

Cache Memory

- One of the major applications of SRAMs is in cache memories in computers.
- Cache memory is a relatively small, high-speed memory that stores the most recently used instructions or data from the larger but slower main memory.

L1 and L2 Caches

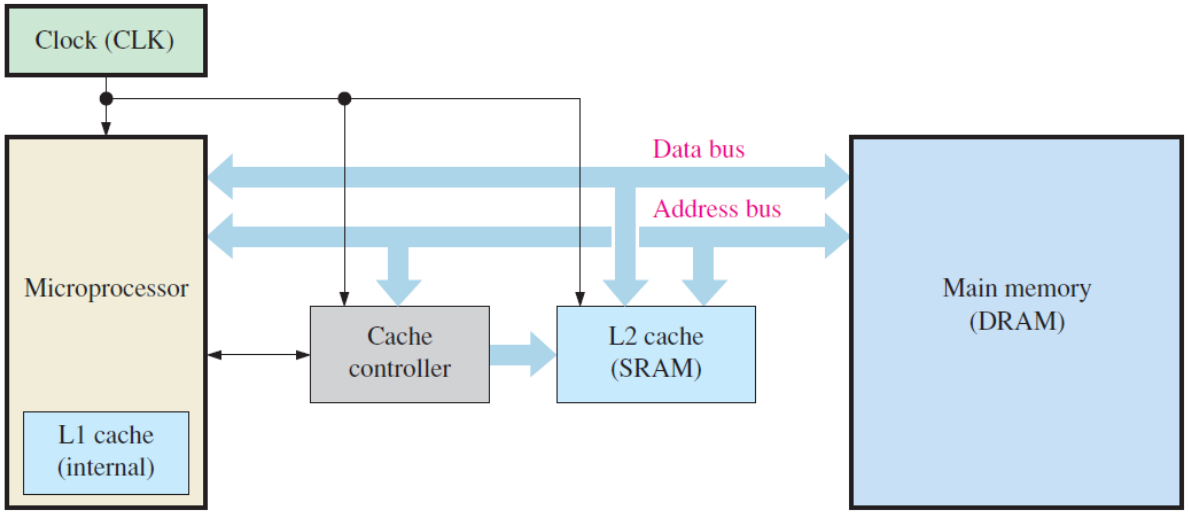

FIGURE 11–16 Block diagram showing L1 and L2 cache memories in a computer system.

Example of Processor Caches

12th Gen Intel® Core™ i3-12100E Processor

The processor has four Performance-cores and three levels of cache. Each core has a private L1 cache and a private L2 cache. All cores share the L3 cache.

Each L2 cache is 1,280 KB and is divided into 10 equal cache ways of 128 KB.

The L3 cache is 12 MB and is divided into 12 equal cache ways of 1 MB.

This processor does not have Efficient-cores.

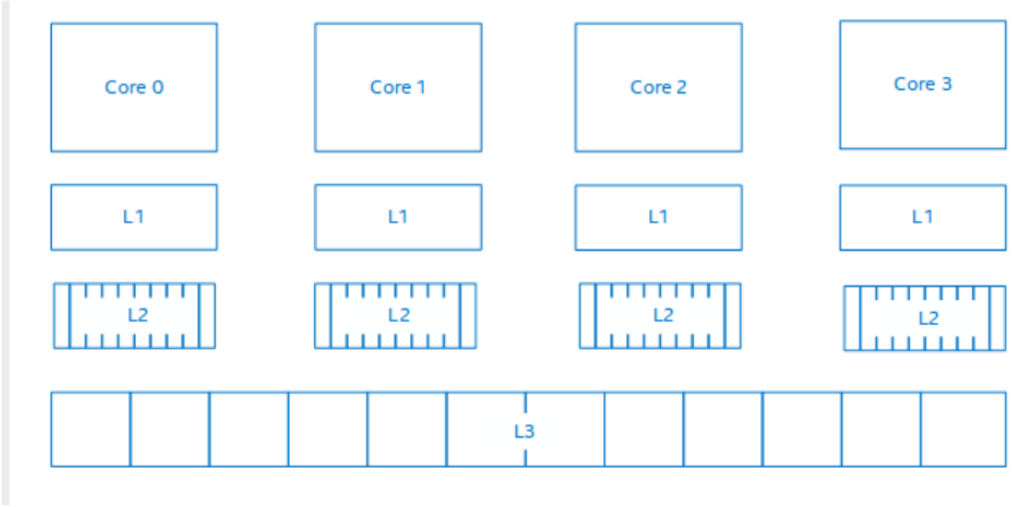

Cache in 12th Gen Intel® Core™ Series Processors

DRAM Cell

- Dynamic memory cells store a data bit in a small capacitor rather than in a latch.
- The advantage is that it is very simple, thus allowing very large memory arrays to be constructed on a chip at a lower cost per bit.
- The disadvantage is that the storage capacitor cannot hold its charge over an extended period of time unless its charge is refreshed periodically.
- To refresh requires additional memory circuitry and power.

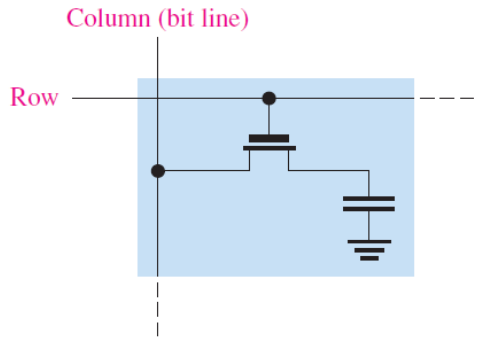

A MOS DRAM cell.

Block Diagram of DRAM

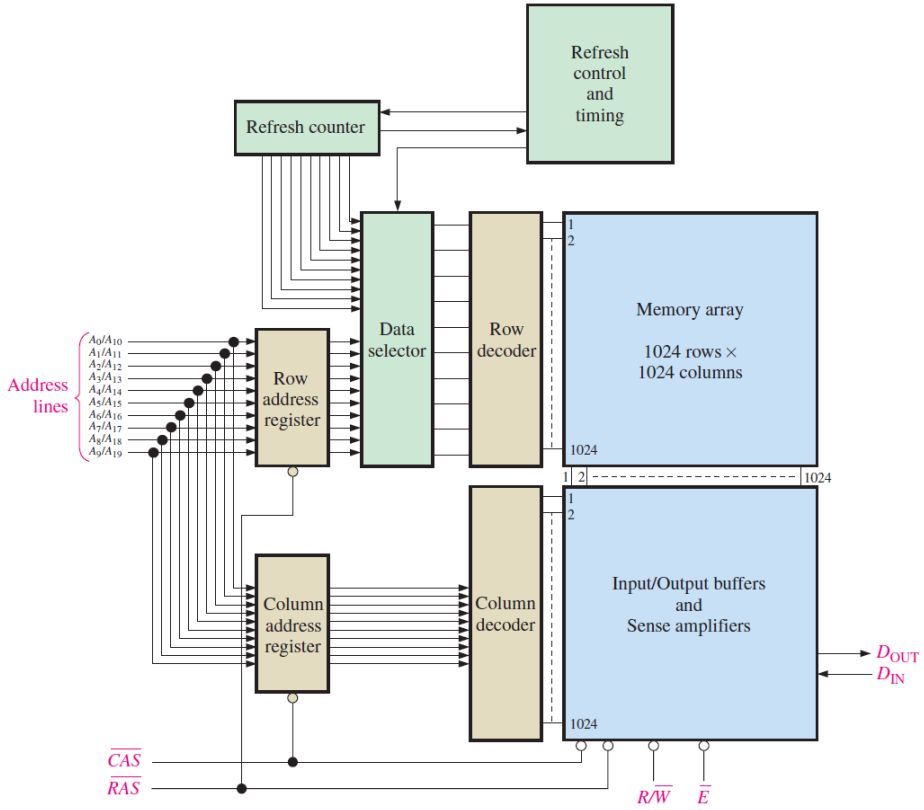

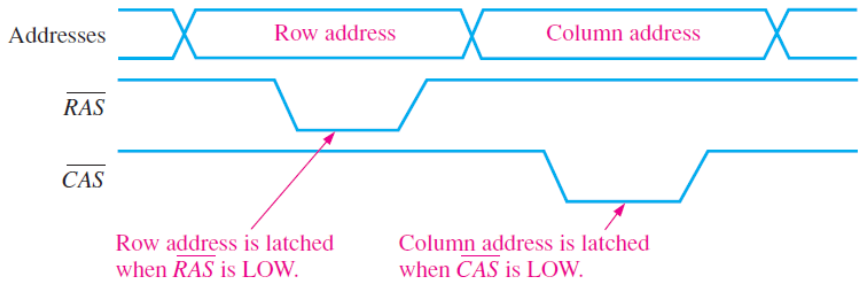

3. The Read-Only Memory (ROM)

The Read-Only Memory (ROM)

- A ROM contains permanently or semipermanently stored data, which can be read from the memory but either cannot be changed at all or cannot be changed without specialized equipment.
- A ROM stores data that are used repeatedly in system applications, such as tables, conversions, or programmed instructions for system initialization and operation.
- ROMs retain stored data when the power is off and are therefore nonvolatile memories.

The ROM Family

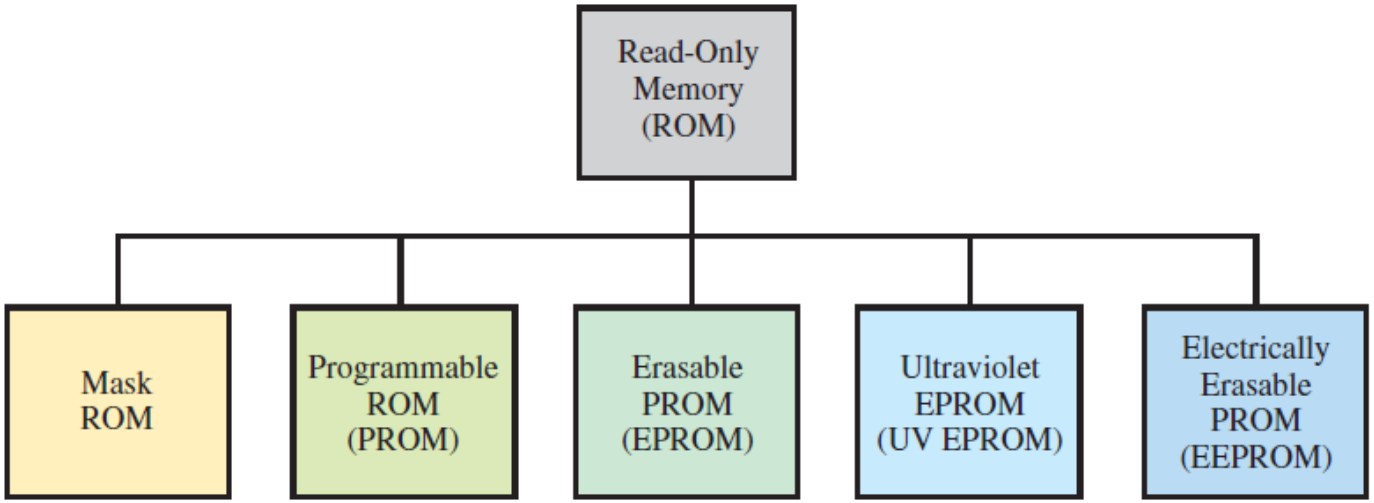

The Mask ROM

- The mask ROM is usually referred to a ROM.
- It is permanently programmed during the manufacturing process.
- To provide widely used standard functions, such as popular conversions, or to provide user-specified functions.
- Once the memory is programmed, it cannot be changed.
- Most IC ROMs utilize the presence or absence of a transistor connection at a row/column junction to represent a 1 or a 0.

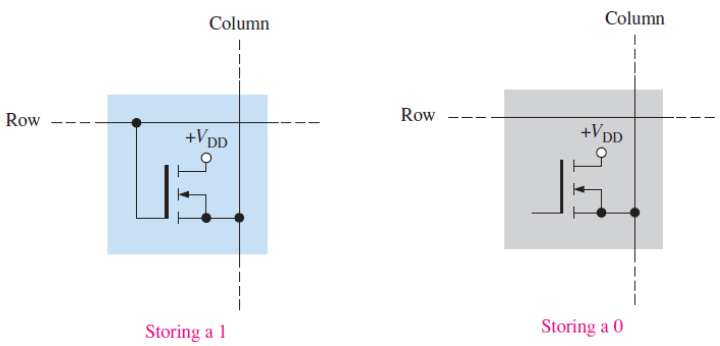

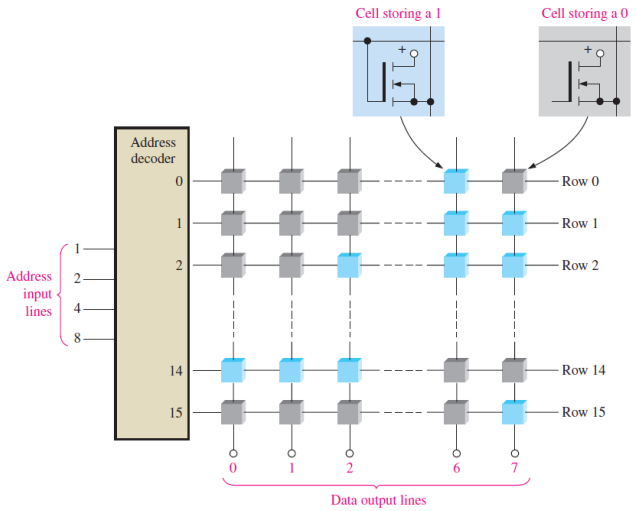

FIGURE 11–25 A representation of a 16 × 8-bit ROM array.

Internal ROM Organization

- A 1024-bit device with a 256 x 4 organization.

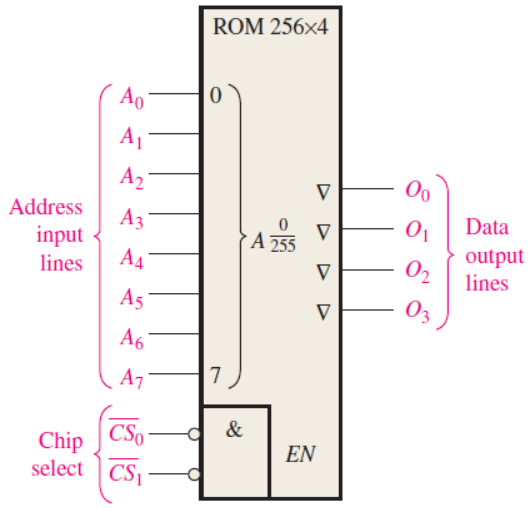

FIGURE 11–27 A 256 × 4 ROM logic symbol. The $A\frac{0}{255}$ designator means that the 8-bit address code selects addresses 0 through 255.

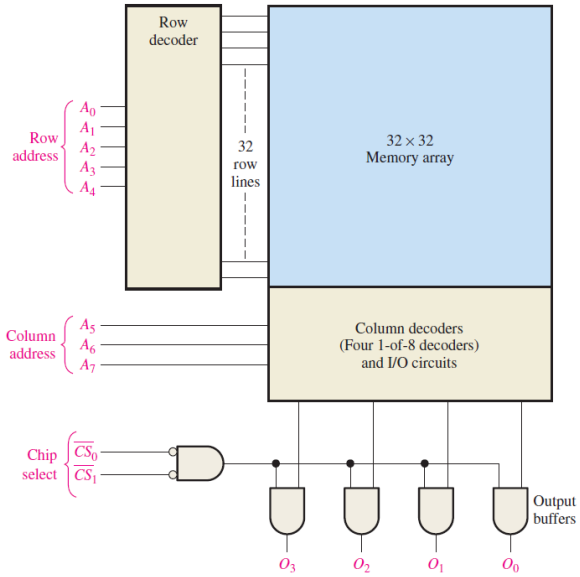

FIGURE 11–28 A 1024-bit ROM with a 256 × 4 organization based on a 32 × 32 array.

Programmable ROM : PROM

- Basically the same as mask ROMs once they have been programmed.
- The difference is that PROMs come from the manufacturer unprogrammed and are **custom programmed** by users.
- A **PROM** uses some type of fusing process to store bits, in which a memory link is burned open or left intact to represent a 0 or a 1.
- The fusing process is **irreversible**; once a PROM is programmed, it cannot be changed.

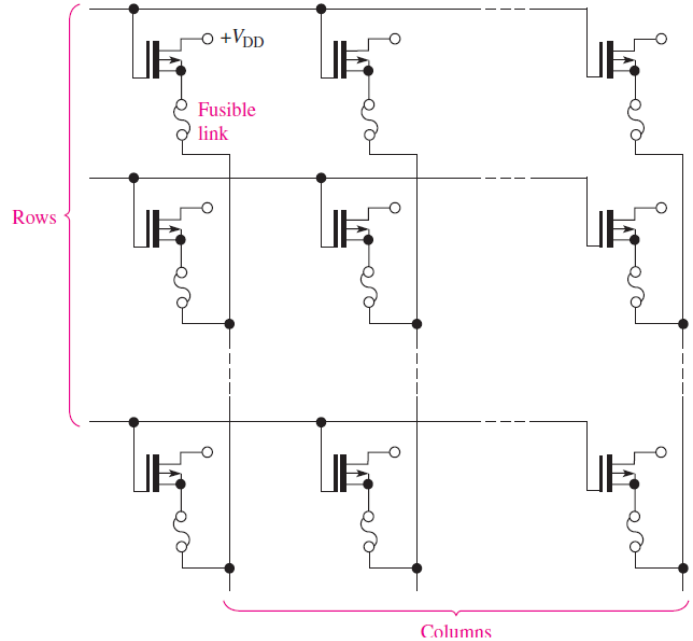

FIGURE 11–30 MOS PROM array with fusible links. (All drains are commonly connected to V_{DD}.)

Erasable PROM : EPROM

- An EPROM can be reprogrammed if an existing program in the memory array is erased first.
- An EPROM uses an NMOSFET array with an isolated-gate structure.
- The isolated transistor gate has no electrical connections and can store an electrical charge for indefinite periods of time.
- The data bits in this type of array are represented by the presence or absence of a stored gate charge.
- Erasure of a data bit is a process that removes the gate charge.

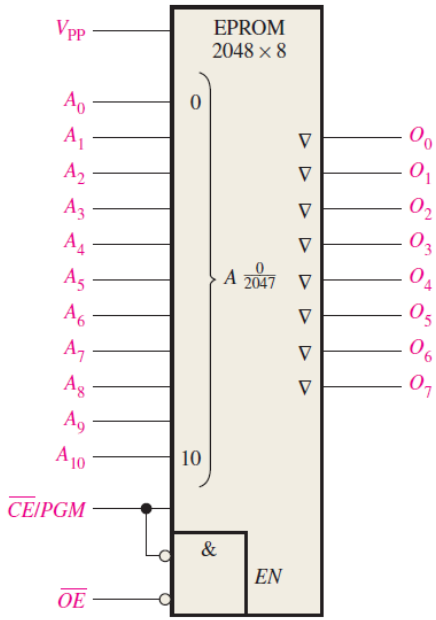

The logic symbol for a 2048 × 8 EPROM.

UV EPROM

- The programming process causes electrons to be removed from the floating gate.
- Erasure is done by exposure of the memory array chip to high-intensity ultraviolet radiation through the UV window on top of the package.

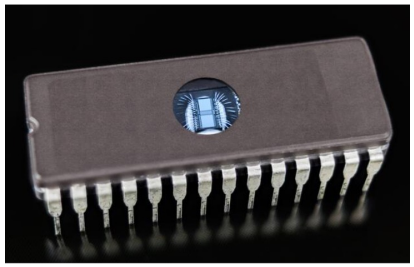

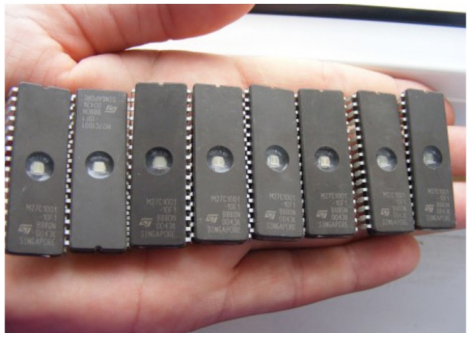

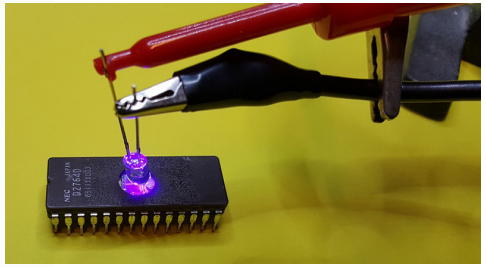

Electrically erasable PROM : EEPROM

- An electrically erasable PROM can be both erased and programmed with electrical pulses.
- Since it can be both electrically written into and electrically erased, the EEPROM can be rapidly programmed and erased in-circuit for reprogramming.

The Flash Memory

- The ideal memory
  - high storage capacity
  - nonvolatility
  - in-system read and write capability
  - comparatively fast operation
  - cost effectiveness.
- The traditional memory technologies such as ROM, PROM, EPROM, EEPROM, SRAM, and DRAM individually exhibit one or more of these characteristics.
- Flash memory has all of the desired characteristics.

The Flash Memory

- Flash memories are high-density read/write memories that are nonvolatile.
- Higher density means more bits can be stored on a given size chip.
- This high density is achieved in flash memories with a storage cell that consists of a single floating-gate MOS transistor.
- A data bit is stored as charge or the absence of charge on the floating gate depending if a 0 or a 1 is stored.

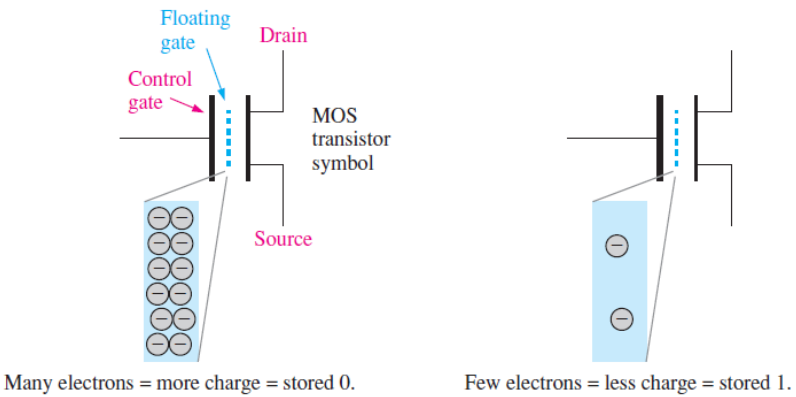

FIGURE 11–33 The storage cell in a flash memory.

Flash Memory Array

- Only one row line is accessed at a time.

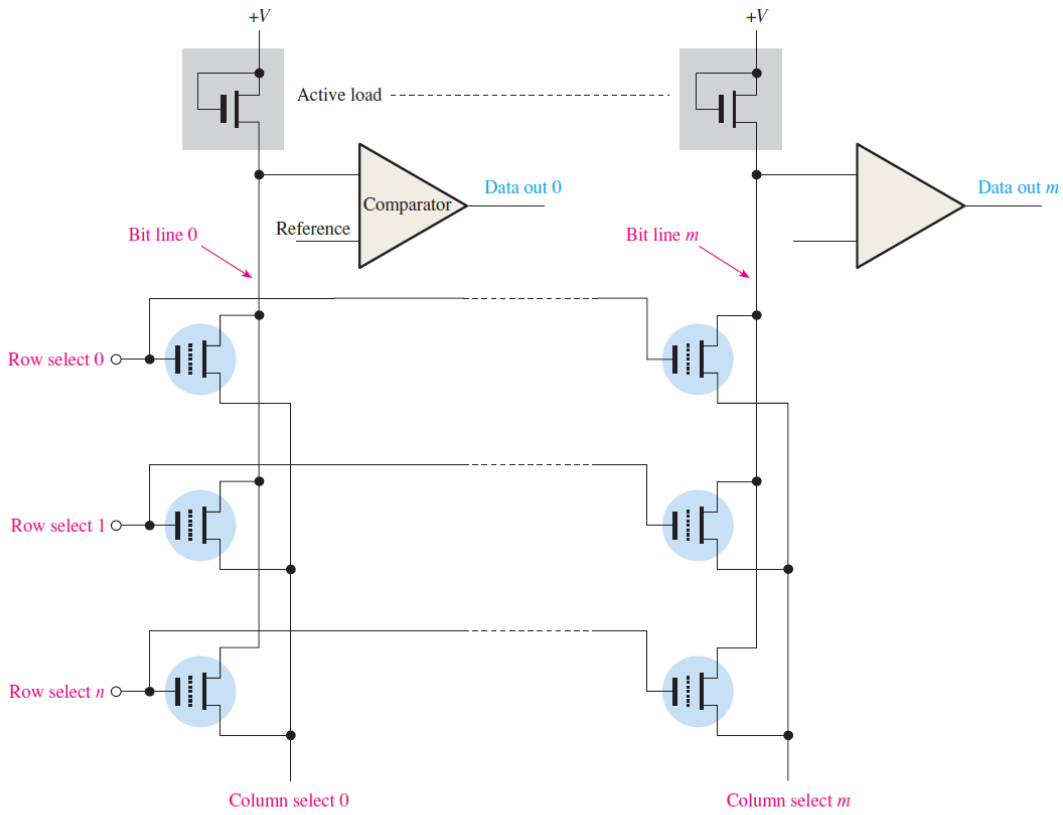

FIGURE 11–37 Basic flash memory array.

Comparison

TABLE 11–2

Comparison of types of memories.

Memory Type	Nonvolatile	High-Density	One-Transistor Cell	In-System Writability
Flash	Yes	Yes	Yes	Yes
SRAM	No	No	No	Yes
DRAM	No	Yes	Yes	Yes
ROM	Yes	Yes	Yes	No
EEPROM	Yes	No	No	Yes
UV EPROM	Yes	Yes	Yes	No

4. Memory Expansion

SRAM Chip

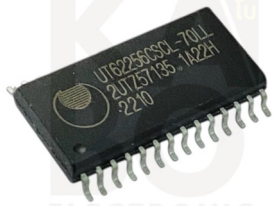

UTRON

Rev. 1.0

UT62256C

32K X 8 BIT LOW POWER CMOS SRAM

FEATURES

- Access time : 35/70ns (max.)
- Low power consumption:
  Operating : 40/30 mA (typical.)
  Standby : 3mA (typical) normal
  2uA (typical) L-version
  1uA (typical) LL-version
- Single 5V power supply
- All inputs and outputs are TTL compatible
- Fully static operation
- Three state outputs
- Data retention voltage : 2V (min.)
- Package : 28-pin 600 mil PDIP
  28-pin 330 mil SOP
  28-pin 8mmx13.4mm STSOP

GENERAL DESCRIPTION

The UT62256C is a 262,144-bit low power CMOS static random access memory organized as 32,768 words by 8 bits. It is fabricated using high performance, high reliability CMOS technology.

The UT62256C is designed for high-speed and low power application. It is particularly well suited for battery back-up nonvolatile memory application.

The UT62256C operates from a single 5V power supply and all inputs and outputs are fully TTL compatible

FUNCTIONAL BLOCK DIAGRAM

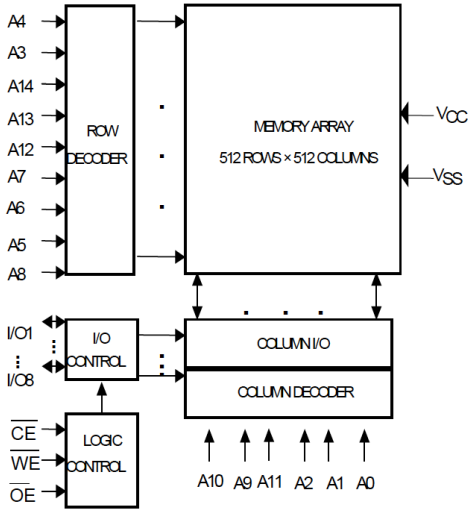

PIN CONFIGURATION

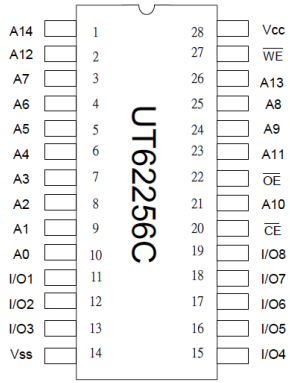

PDIP/SOP

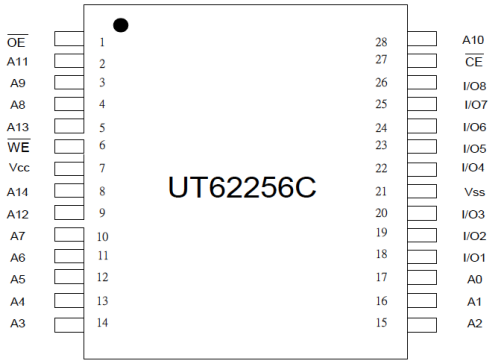

STSOP

PIN DESCRIPTION

SYMBOL	DESCRIPTION
A0 - A14	Address Inputs
I/O1 - I/O8	Data Inputs/Outputs
$\overline{CE}$	Chip Enable Input
$\overline{WE}$	Write Enable Input
$\overline{OE}$	Output Enable Input
V_{CC}	Power Supply
V_{SS}	Ground

READING DATA
FROM SRAM

TIMING WAVEFORMS

READ CYCLE 1 (Address Controlled) (1,2,4)

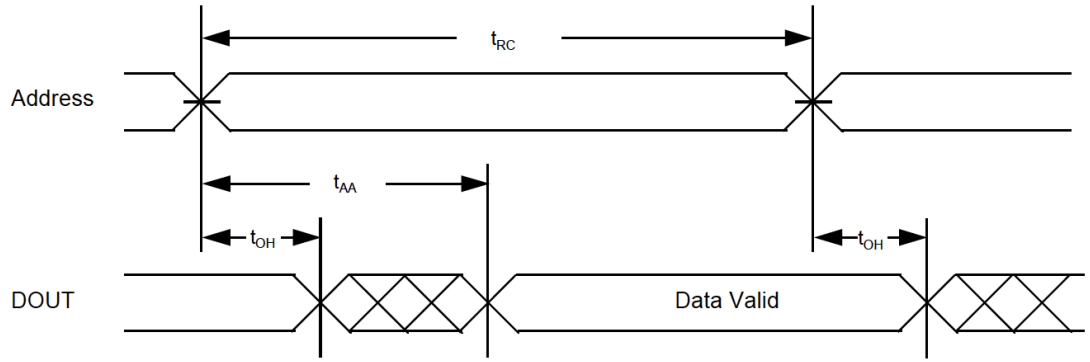

READ CYCLE 2 ($\overline{CE}$ and $\overline{OE}$ Controlled) (1,3,5,6)

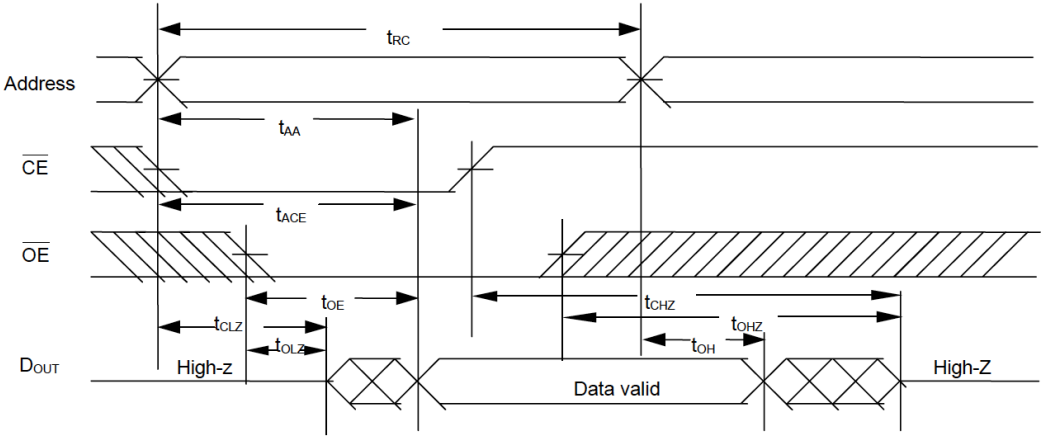

WRITING DATA TO SRAM

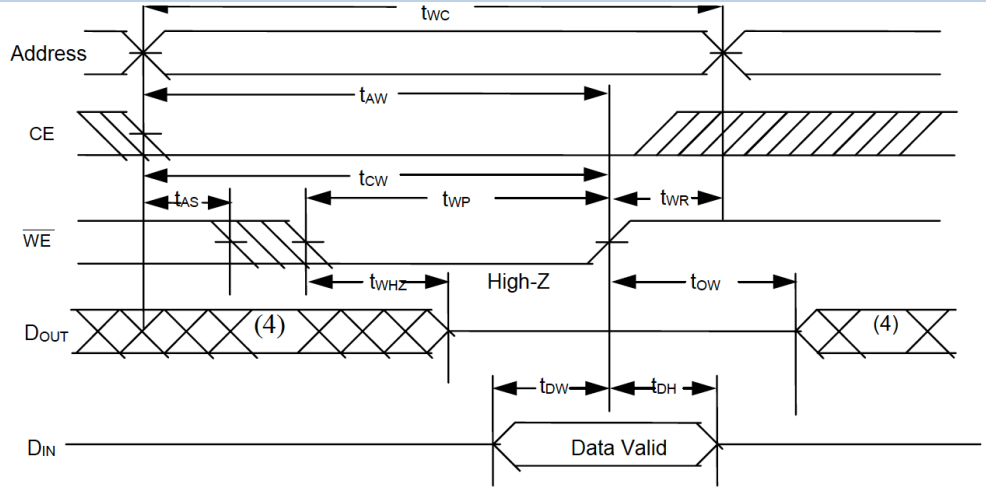

WRITE CYCLE 2 ($\overline{CE}$ Controlled) (1,2,5)

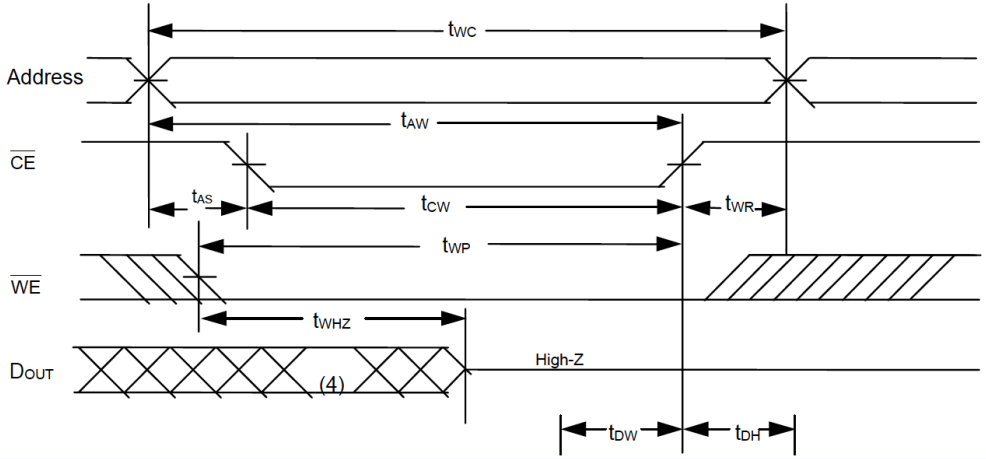

Memory Expansion

- Available memory can be expanded to increase the word length (number of bits in each address) or the word capacity (number of different addresses) or both.
- Memory expansion is accomplished by adding an appropriate number of memory chips to the address, data, and control buses.

Word-Length Expansion

- To increase the word length of a memory, the number of bits in the data bus must be increased.
- For example, an 8-bit word length can be achieved by using two memories, each with 4-bit words

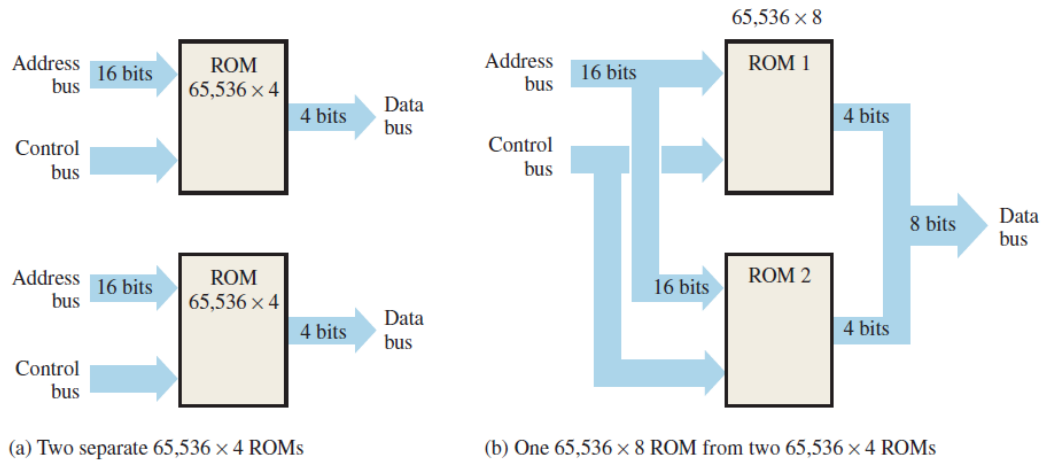

FIGURE 11–40 Expansion of two 65,536 × 4 ROMs into a 65,536 × 8 ROM to illustrate word-length expansion.

EXAMPLE 11–2

Expand the 65,536 × 4 ROM (64k × 4) in Figure 11–41 to form a 64k × 8 ROM. Note that "64k" is the accepted shorthand for 65,536. Why not "65k"? Maybe it's because 64 is also a power-of-two.

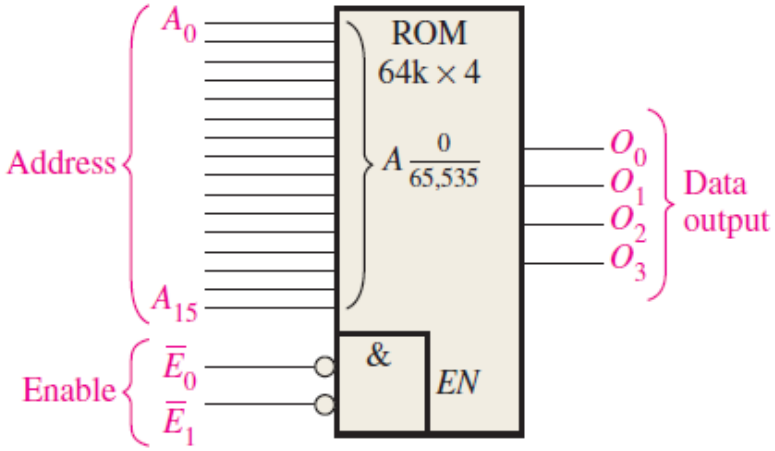

FIGURE 11–41 A 64k × 4 ROM.

Solution

Two 64k × 4 ROMs are connected as shown in Figure 11–42. Notice that a specific address is accessed in ROM 1 and ROM 2 at the same time. The four bits from a selected address in ROM 1 and the four bits from the corresponding address in ROM 2 go out in parallel to form an 8-bit word on the data bus. Also notice that a LOW on the enable line, $\overline{E}$, which forms a simple control bus, enables *both* memories.

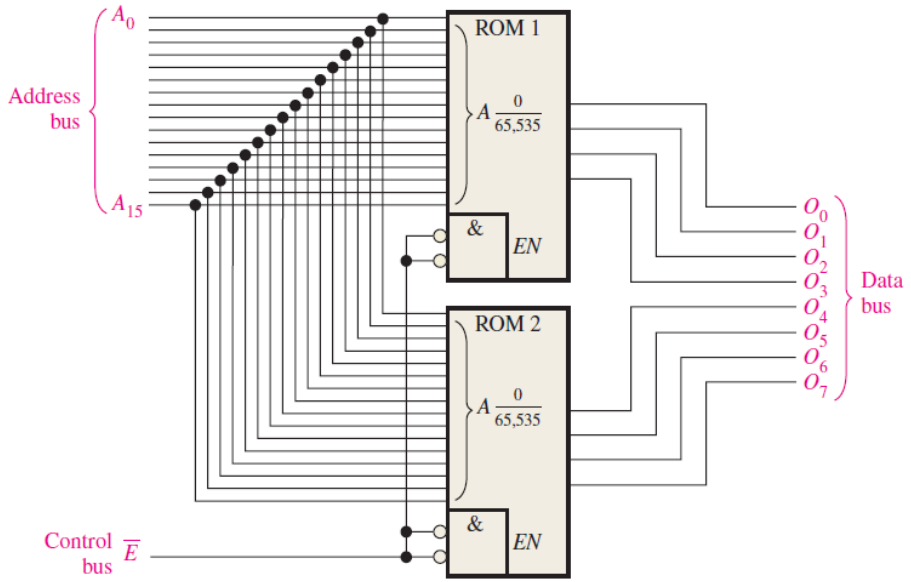

FIGURE 11–42

Related Problem

Describe how you would expand a 64k × 1 ROM to a 64k × 8 ROM.

EXAMPLE 11–3

Use the memories in Example 11–2 to form a 64k × 16 ROM.

Solution

In this case you need a memory that stores 65,536 16-bit words. Four 64k × 4 ROMs are required to do the job, as shown in Figure 11–43.

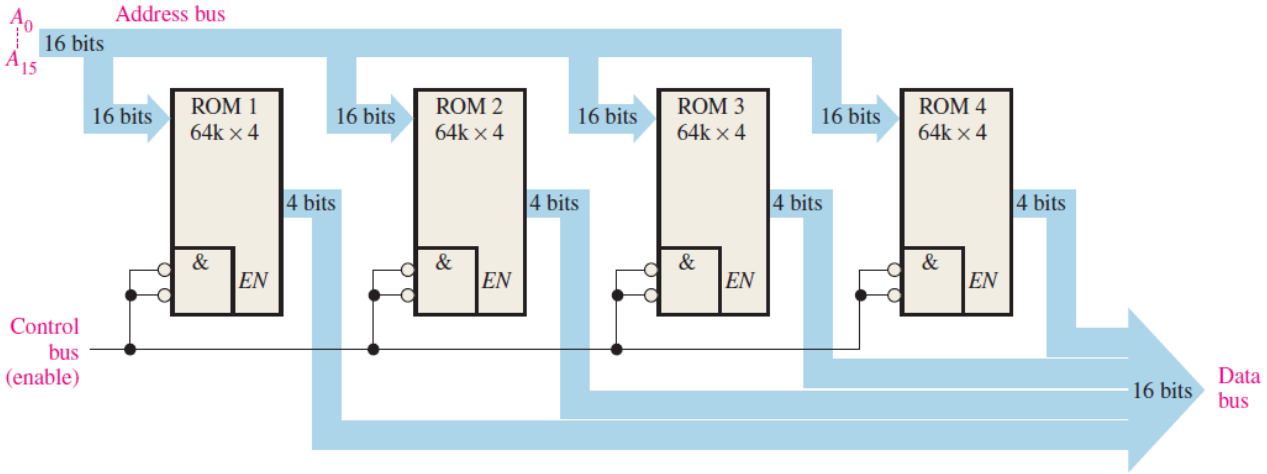

FIGURE 11–43

Related Problem

How many 64k × 1 ROMs would be required to implement the memory shown in Figure 11–43?

RAM Data In/Out

A ROM has only data outputs, but a RAM has both data inputs and data outputs. For word-length expansion in a RAM (SRAM or DRAM), the data inputs *and* data outputs form the data bus. Because the same lines are used for data input and data output, tri-state buffers are required. Most RAMs provide internal tri-state circuitry. Figure 11–44 illustrates RAM expansion to increase the data word length.

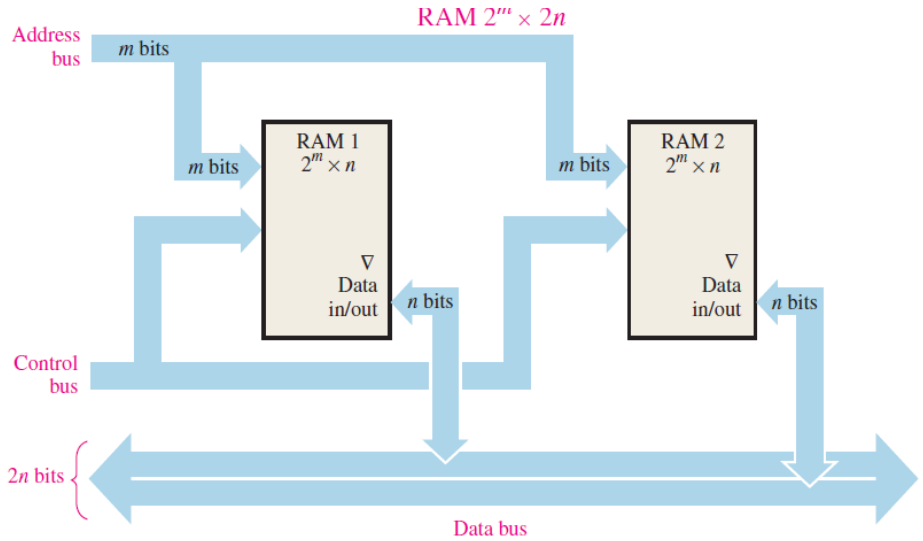

FIGURE 11–44 Illustration of word-length expansion with two $2^m \times n$ RAMs forming a $2^m \times 2n$ RAM.

EXAMPLE 11–4

Use 1M × 4 SRAMs to create a 1M × 8 SRAM.

Solution

Two 1M × 4 SRAMs are connected as shown in the simplified block diagram of Figure 11–45.

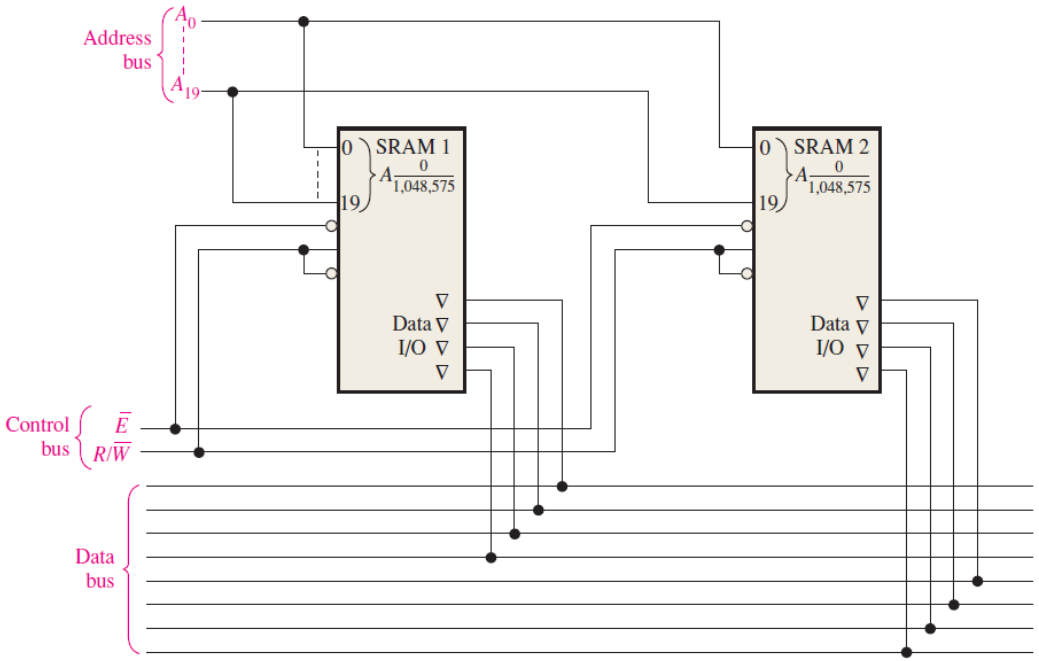

FIGURE 11–45

Related Problem

Use 1M × 8 SRAMs to create a 1M × 16 SRAM.

Word-Capacity Expansion

- When memories are expanded to increase the word capacity, the number of addresses is increased.
- To achieve this increase, the number of address bits must be increased.
- E.g. two 1M x 8 RAMs are expanded to form a 2M x 8 memory.

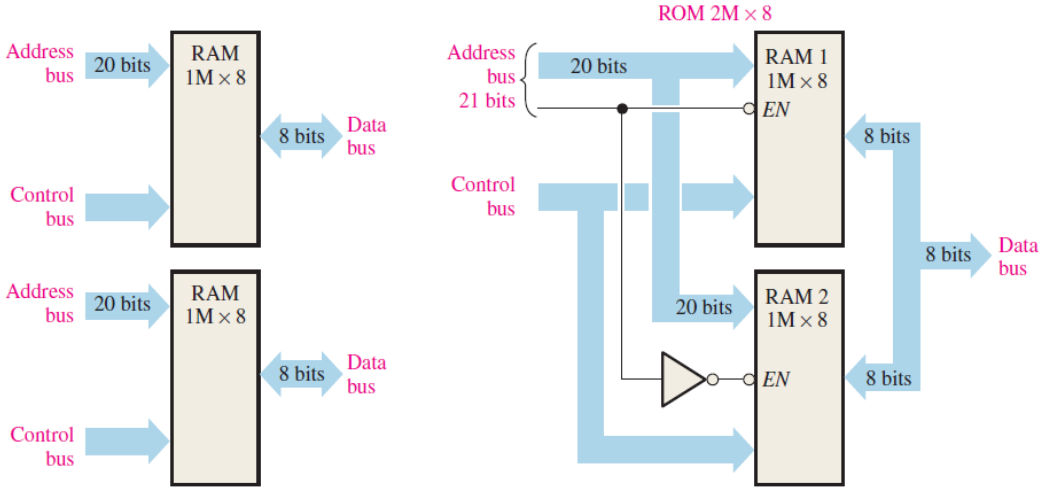

(a) Individual memories each store 1,048,576 8-bit words

(b) Memories expanded to form a 2M × 8 RAM requiring a 21-bit address bus

EXAMPLE 11–5

Use 512k × 4 RAMs to implement a 1M × 4 memory.

Solution

The expanded addressing is achieved by connecting the enable ($\overline{E}_0$) input to the twentieth address bit (A_{19}), as shown in Figure 11–47. Input $\overline{E}_1$ is used as an enable input common to both memories. When the twentieth address bit (A_{19}) is LOW, RAM 1 is selected (RAM 2 is disabled), and the nineteen lower-order address bits (A_0–A_{18}) access each of the addresses in RAM 1. When the twentieth address bit (A_{19}) is HIGH, RAM 2 is enabled by a LOW on the inverter output (RAM 1 is disabled), and the nineteen lower-order address bits ($A_0 - A_{18}$) access each of the RAM 2 addresses.

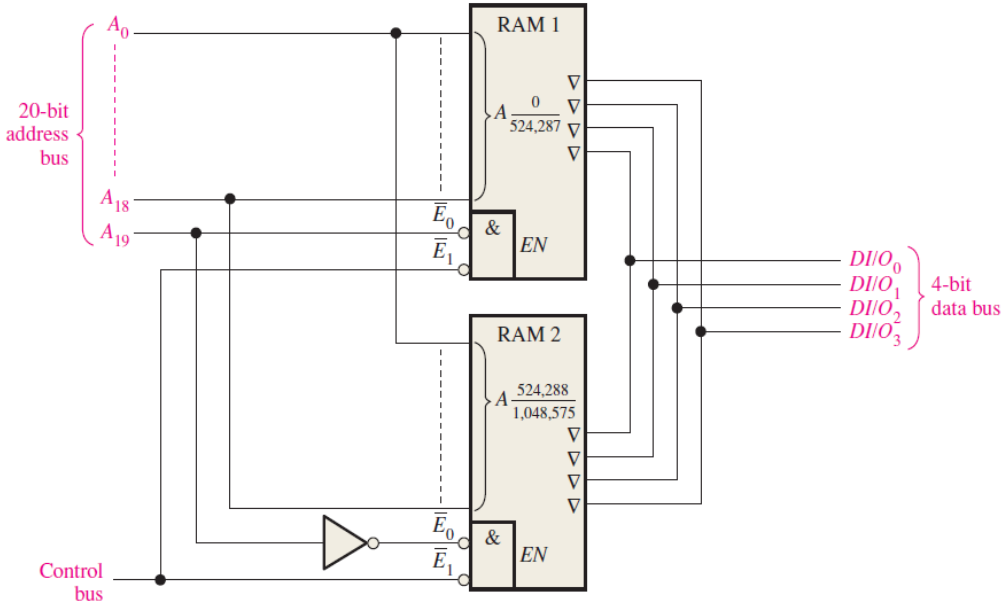

FIGURE 11–47

Related Problem

What are the ranges of addresses in RAM 1 and in RAM 2 in Figure 11–47?

THANK YOU